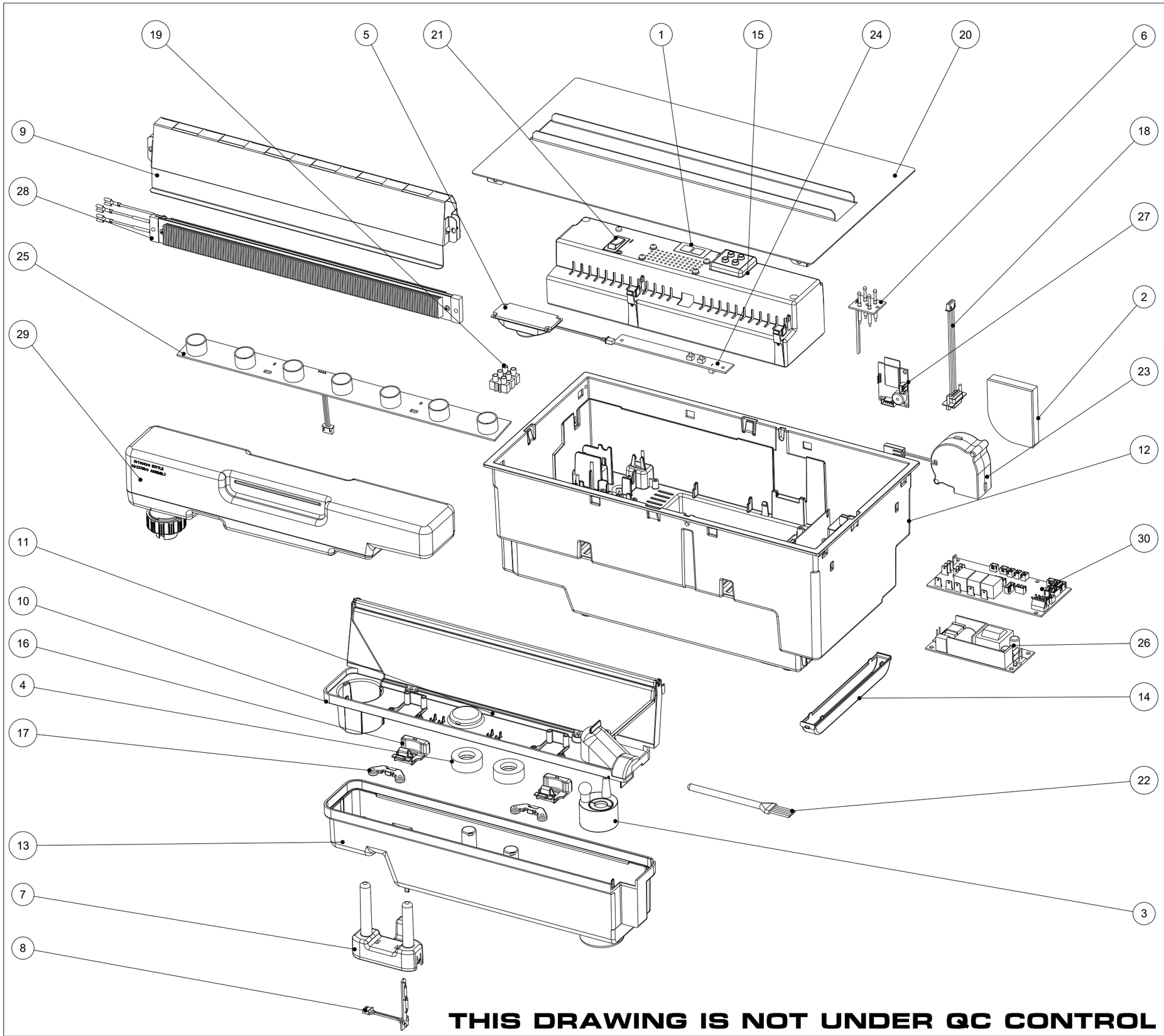

NO.	PART NO.	DESCRIPTION	QTY
1	1/110020/0	2 WAY DECAL	1
2	1/67007/0	FILTER	1
3	1/70852/0	GLASS DISC TRANSDUCER	1
4	1/71140/0	FLOAT MAGNET	2
5	1/71819/0	SPEAKER	1
6	1/73060/0	FUELBED POGO BOARD	1
7	1/73975/0	Reed Switch Holder	1
8	1/73991/0	Reed Switch - Max/Min	1
9	1/74022/0	ELEMENT SUPPORT	1
10	1/74041/0	BOTTLE BASE	1
11	1/74042/0	NOZZLE COVER	1
12	1/74256/0	Base Moulding	1
13	1/74257/0	SUMP	1
14	1/74258/0	Duct Cover	1
15	1/74262/0	Controls Cover	1
16	1/74663/0	CATCH BASE	2
17	1/74920/0	CATCH CLAMP	2
18	1/74960/0	9-WAY MODULE WIRE	1
19	2/60424/0	3WAY 10A TERMINAL BLOCK	1
20	2/62581/0	METAL BED S/W ASSY	1
21	3/21056/0	ON OFF SWITCH	1
22	3/22494/0	CLEANING BRUSH	1
23	3/23193/0	24V DC MOTOR	1
24	3/23276/1	OSD Board (2)	1
25	3/23465/0	7 LED BOARD	1
26	3/23466/0	24V DC PSU	1
27	3/23619/0	HEADLESS MODULE	1
28	3/23693/0	EXTRUDED ELEMENT	1
29	3/23755/0	Bottle Assembly	1
30	3/23759/0	MAIN PCB	1

GLEN DIMPLEX RESEARCH & DEVELOPMENT
HEATING AND VENTILATION IRELAND
Barn road, Dunleer, Co.Louth, Ireland. Tel: +353(0)41 6872000

THIS DRAWING IS SUPPLIED IN CONFIDENCE AND THE COPYRIGHT THEREOF IS THE PROPERTY OF GLEN DIMPLEX : IT MUST NOT BE USED BY A THIRD PARTY WITHOUT PRIOR PERMISSION. © 2019

DRAWN BY	CL	A3	TITLE PRODUCT ASSEMBLY
SERIES	A		
SERIES DATE	11-07-19		
ISSUE	3		DRG NO 7/20499/0
PROJECT	CAS400L		

THIS DRAWING IS NOT UNDER QC CONTROL

OCN	-----
DATE	--/--/--